BLDC 56 SERIES

SPECIFICATION

	UNIT	MODEL		
		DBT566S32A	DBT566L31A	DBT566C31A
Rated Voltage	(VDC)	24	24	24
No-load speed	(RPM)	4400	3700	3600
Continuate torque	(kgf-cm)	1.93	2.85	3.77
Continuate Speed	(RPM)	2700	2740	2800
Continuate Current	(A)	3.75	5.5	6.5
Output Power	(W)	50	80	110
Peak Torque	(kgf-cm)	5.7	10.8	13.6
Peak Current	(A)	10	18.5	25.3
Winding Resistance	(Ω)	1.3	0.8	0.44
Inductance	(mH)	1.8	1.25	0.83
Rotor Inertia	($g\text{-}cm^2$)	200	330	500
Motor Weight	(Kg)	0.6	1.1	1.5
Environment Temperature	(°C)	-10~+60	-10~+60	-10~+60

● To customize motors, please contact with us or our agent.

DIMENSION

DIMENSION (UNIT: mm)

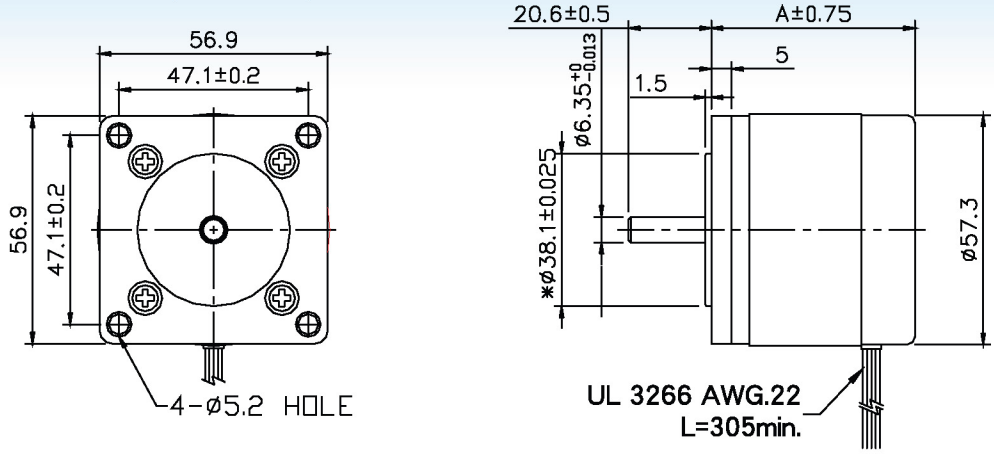

TYPE \ DIM.	A
S	50.8
L	76.2
C	101.6

HALL SWITCHES

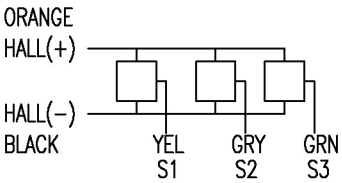

MOTOR SCHEMATIC

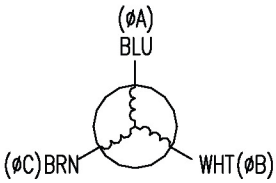

PERFORMANCE CURVE

DBT566S32A1000000 (DART 710A)

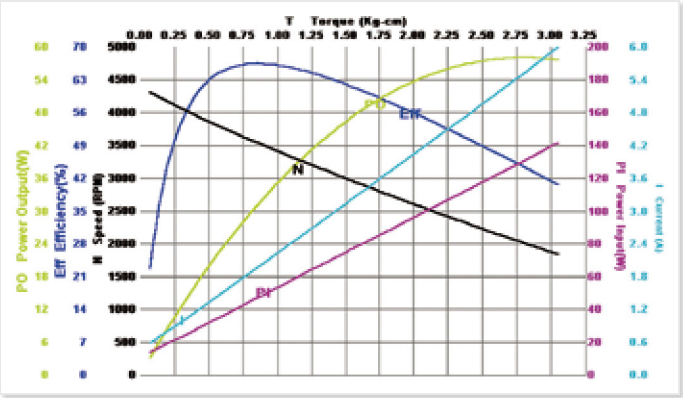

DBT566L31A1000000 (DART 710A)

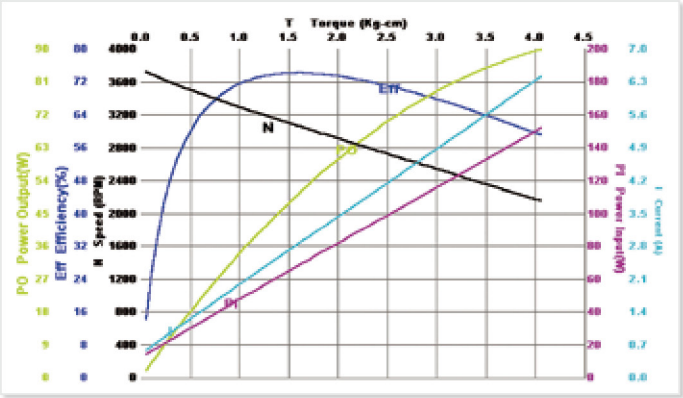
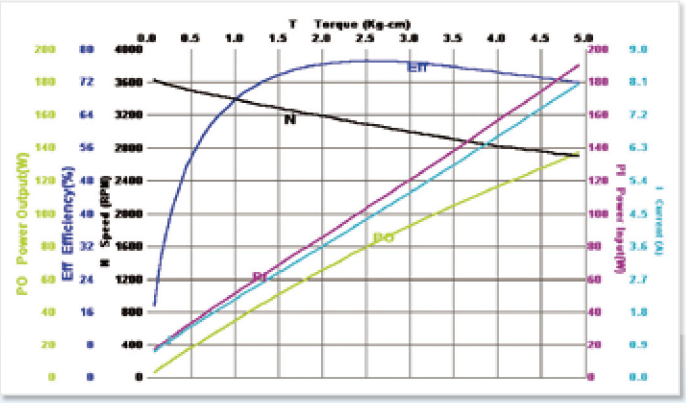
DBT566C31A1000000 (DART 710A)